Belmont®

Quolis® 5000 Chair full size template

J.box full size template for
pre-installation plumbing

Last updated Oct 18, 2007

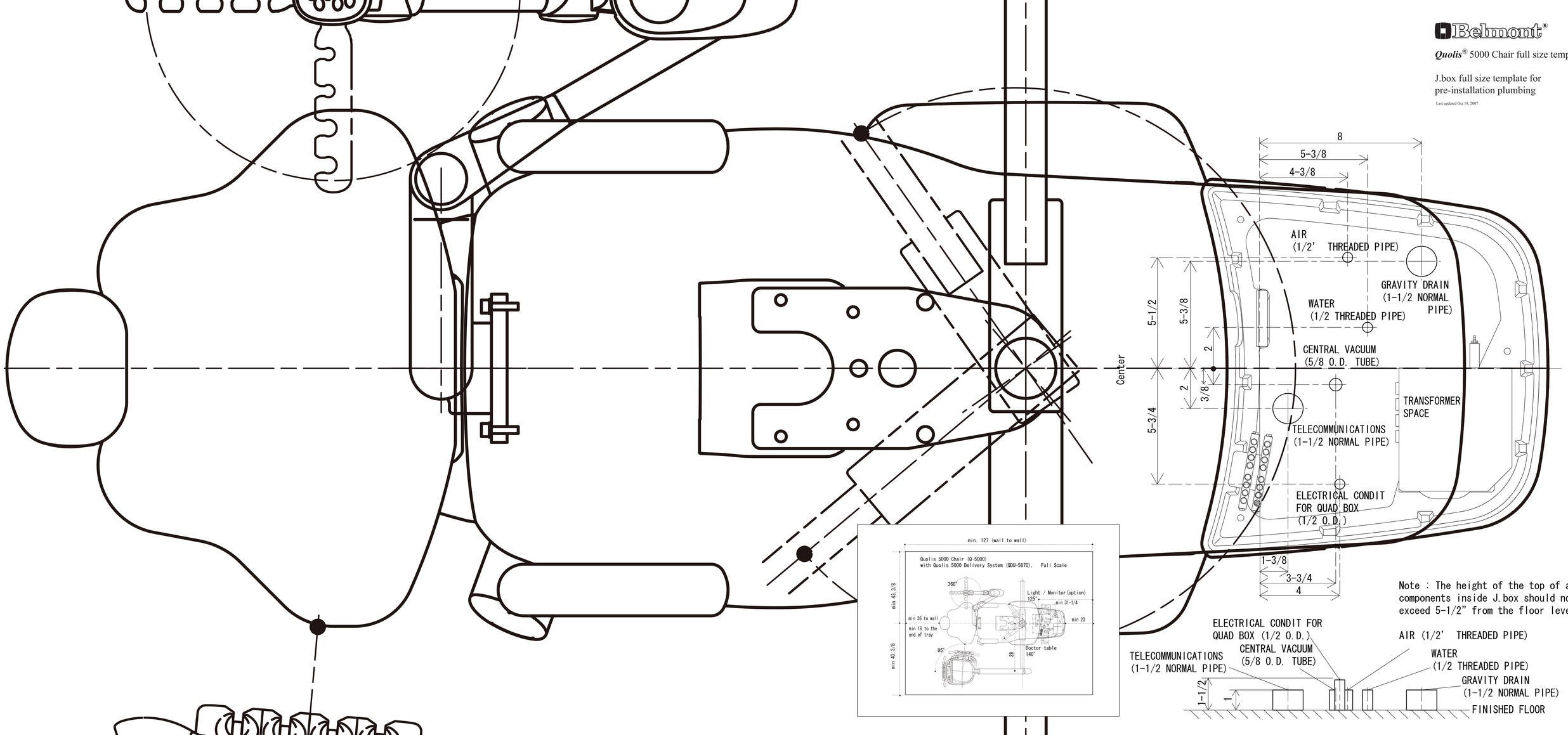

Note : The height of the top of any components inside J.box should not exceed 5-1/2" from the floor level.